NUMERICAL MODELING OF WELDED RIGID BEAM-COLUMN CONNECTIONS AT MULTI-STOREY STRUCTURES

M.Sc. Trajanoska B.[1], M.Sc. Arsova-Miloshevska G [2].,Prof. Bogatinoski Z. PhD[1]
Faculty of Mechanical Engineering – Ss. "Cyril and Methodius" University Skopje, Republic of Macedonia[1]
BALKANSKI 2000 – Sofia, Bulgaria [2]

Abstract: *In this paper is presented the theoretical analysis and numerical modeling of the Moment Resistant Connection (MRC) of some welded rigid beam-column connection. Completely welded beam-column connection is relatively rigid, thus in case of small deformation (i.e., deflection) a collapse of the connection will occur. It can be concluded, that properly designed connection get together a significant bearing capacity which is in direct correlation with both stiffness and connection ductility. The dependence of the bending moment from rotation at the end of the beam–column connection is one of the most important diagrams for the connection characteristics.*

Due to the analysis gained with the numerical modeling using ANSYS, as the most vital elements of the multi-storey frame structures certain conclusions has been gained and presented in this paper. Some details from these analysis have is presented in Literature [1].

Keywords DESIGN, MOMENT RESISTANT CONNECTION, RIGID BEAM-COLUMN CONNECTION, MULTI-STOREY STRUCTURE, FRAME, BENDING MOMENT, ROTATION, PLASTIC HINGE.

1. Introduction

The construction engineering gets more popular over the past years as the growth of the human population rises. This fact becomes a challenge for the constructors as the available building space shrinks. Due to this, the buildings grow in height and their complexity rises. The big height and complex appearance make the overall load of the construction get higher values, so the designers are facing a new problem of choosing the right elements and connections for the structure. Great amount of money and effort are put in years of researching in order to dealing with this challenge of finding the common construction solution through testing of structure models, its segments (connections and connections members) as well as actual size buildings.

The changes in the design consist in constant improvement of the construction in order to getting a less complex and low-cost structure, better material quality for the bearing and non bearing part of the structure, using more effective techniques of analysis, changing the connection design trough optimizing them for confirming the structural stability and functionality.

The most important characteristics that define one connection are the rotational stiffness and capacity. These characteristics are given in a moment-rotation diagram that defines every connection (figure 1).

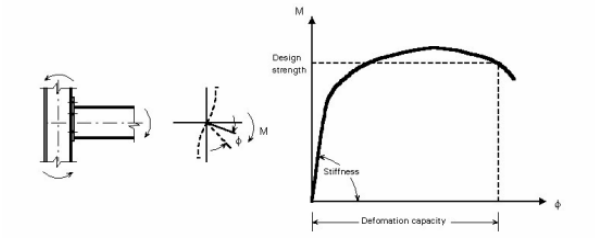

Fig. 1 *Moment-rotation diagram for a connection*

A connection may consist of different members including the bearing construction elements - beam and column, so its characteristics are defined by the each element`s behavior. The numerical analysis allows making different variations of connecting these elements due to getting the best connection solution that fulfills the structure design requirements regarding the structure stability and safety. As soon as the connection has its member combination this connection can undergo experimentally testing and get its numerical analysis solution validity approved or denied.

2. The beam-column connection characteristics and types

The need of a connection in a structure is the most important characteristic valid for the engineer's choice during the construction designing. This need usually comes as a result of the limited construction elements length and dimensions as well as the structure height. The practice shows that in a structure in general, beam to column connections are the most vital parts, and this is why its design and characteristics improvement is important for the construction engineers.

In order to make a good connection design, we need to: know the connection characteristics, adjust the behavior of the connection and its members, define the mechanical model of the connection, have the types of connection given according moment-rotation relationship, know the design criteria and calculation.

The rotational capacity and stiffness of the connection are one the general criteria in designer`s choice of connection, and also a base for forming the basic types of connection: flexible, semi-rigid and rigid connections. These types of connection and its characteristics are shown in the moment-rotation diagram, as in figure 2.

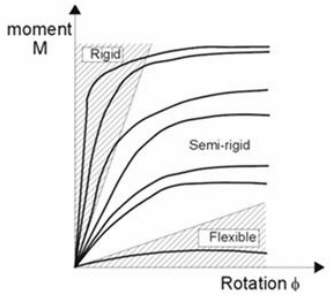

Fig. 2 *Connection types according moment-rotation diagram*

In cases of high constructions, rigid connections are commonly used. This comes as a result of the great deflections that can occur under the wind load or earthquake. According to the theory rigid connections have the appropriate rotational capacity and stiffness needed in such cases. However, there are different rigid connections considering the different members included in the connection design and their function. Since the rotational capacity of the connection is defined as sum of its members` capacity individually, an analysis of the different types of rigid connections and their characteristics is needed.

3. The finite element analysis of rigid connection models[1]

In this paper is presented a finite element analysis of four rigid connection models, that represent one type of a moment resistant connection (MRC). The models are made in a software program Autodesk Inventor, and then imported as .STEP files in Ansys Workbench where the structural analysis is made. The models represent four fully welded rigid connection designs of a beam to column connection with chosen profiles/cross-sections; the beam profile is an IPE300 and the column has a HEA260 profile. The defining of the environment of the models, the mesh generation and the load implementation is done in the analysis program. The mesh that is used is consistent for all of the models, it is method mesh/all thethraedons, with specific contact sizing type in the welded zone, due to the defining the contact of the welded parts. The load is presented through a vertical force causing a bending moment in the connection. The material properties of the connection elements and the welds are defined with a load-deflection diagram for constructional steel shown in figure 3.

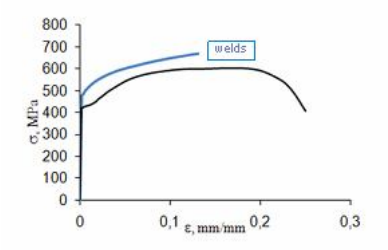

Fig.3 *Load (s)-deflection (e) diagram for constructional steel used for connection members and welds*

Regarding the modeling of the connection as a part of a multi-storey structure, the column has a defined ground at both ends, that sets the translation at zero and only rotation is allowed (figure 4).

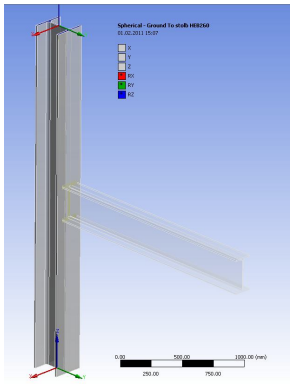

Fig.4 *Body to Ground contact of the model*

3.1. Fully welded beam to column connection

The first model is a fully welded rigid beam to column connection that is shown in figure 5 together with the mesh model and the load implementation. The applied force is 211 kN, as a calculated force of reaching the plastic moment of the chosen beam profile.

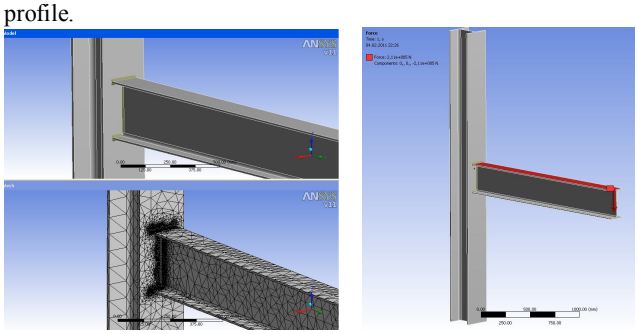

Fig.5 *Model of fully welded beam to column connection*

At the end of the structural analysis, the results of the stress distribution and the deformation under the applied load are gained. The maximum and minimum value of the stress, its location and the total deformation at the end of the beam are shown on the graphical preview of the solved model (as in figure 6).

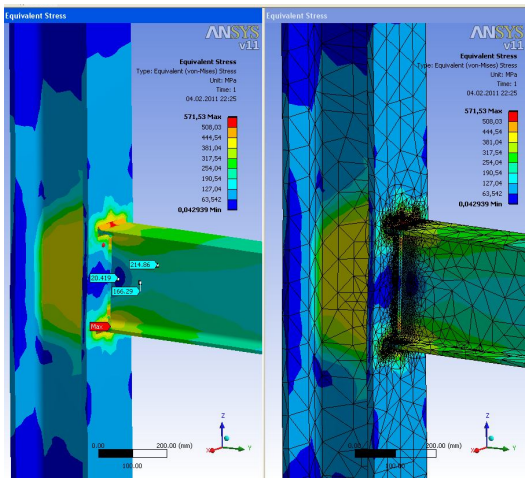

Fig.6 *Preview of a solved connection model*

The stress distribution (after Von-Misses) shown in figure 6 is the result of the obtained analysis of this connection model. The maximum stress is located in the weld of the lower part of the beam section where compression is present and its value is 572 MPa (N/mm^2). This type of rigid connection shows that the welds and the column web are the most stressed locations. The welds along the beam rib that accept the shear force are in a zone of minimal stress value, which is 20 MPa according to the stress legend. Unlike this, the welds along the beam flange, bearing the bending moment, experience stress value near the maximum occurred. Concerning the deformation that appears under the applied load, the maximum deflection is 72,2 mm and is measured at the end of the beam as shown in figure 7. The graphical review of the deformation is given in scale regarding the real deformation of the construction elements at the end of the analysis.

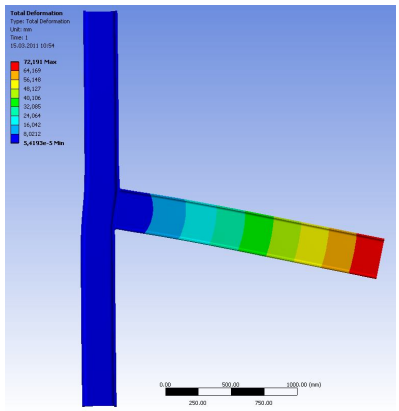

Fig.7 *Total deformation of the connection*

3.2. Fully welded beam to column connection with four column web bracing plates

This model represents a variety of the previous connection model with included bracing in the column web consisting four plates joined to the web with fillet welds as shown in figure 8.

The goal of including such bracing is increasing the rotational stiffness of the connection, decreasing the concentrated stress value and overall controlling of the stress distribution. As the environment is done, and the analysis is finished, the results are given in the graphical review as in figure 9.

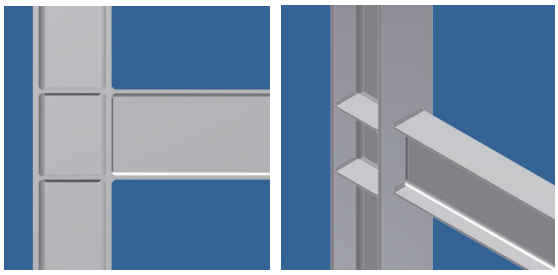

Fig.8 *Fully welded beam to column connection with four column web bracing plates*

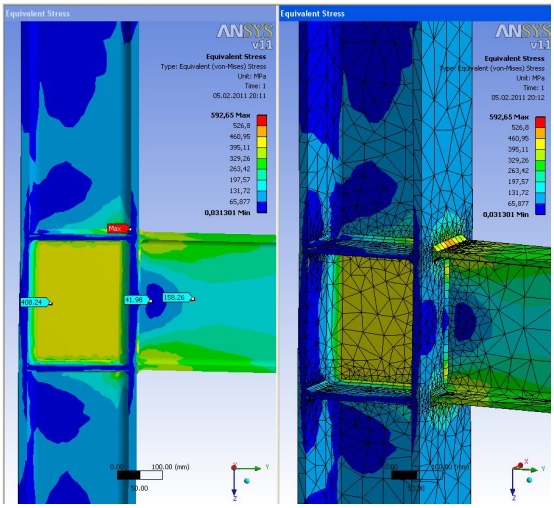

Fig.9 *Preview of a solved connection model*

The maximum of the stress occuring in the soved model is located in the one of the colum web and bracing plate weld, and compared to the previous model has a higer value, 593 MPa. With this bracing, the stress in the connection welds get partialy reduced and the higher stress appearce in the colum web. Due to this the upper flange experiences lower tension and the location of the plastic hinge is moved toward the centar of the beam. The welds bearing the bending moment are “relaxed” and undergo a lower stress values. The next figure shows the resulted total deformation of this connection model.

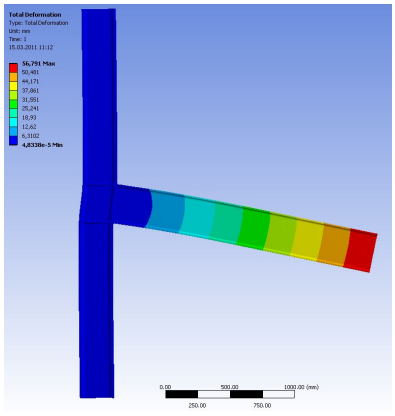

Fig.10 *Total deformation of the connection*

3.3. Fully welded beam to column connection with flange bracing

The third model is a beam-column connection that is fully welded and includes two welded ribs as flange bracing. The ribs are defined as solid parts with same material properties as the other elements of the connection. The model is shown in figure 11.



Fig.11 *Fully welded beam to column connection with flange bracing*

With this type of bracing, where the result is increased stiffness of the connection, the plastic hinge is expected to appear away from the connection itself, as well as lower stress value in the column web. The solution of this model is shown in the next figure 12.

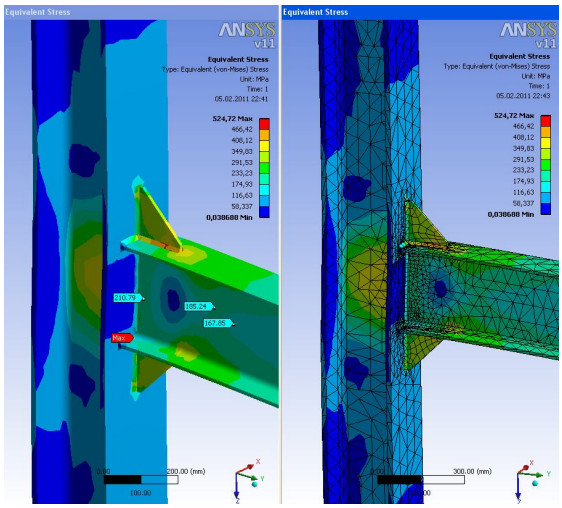

Fig.12 *Preview of a solved connection model*

The solution shows a great improvement of the connection stiffness regarding the previous two models. The plastic hinge appears away from the beam end as expected. The maximum stress value is 525 MPa and its location is in the lower flange to bracing rib weld. This maximum stress area also appears in the upper flange welds but doesn`t affect the overall connection rotational stiffness. Next figure 13 shows the effect of the bracing to the rotational capacity and stiffness of the connection by the total deformation of the connection. This model`s deformation is 39,2 mm and it is shown in bigger scale so it can be analyzed.

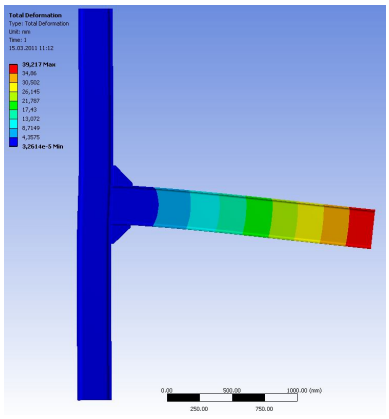

Fig.13 *Total deformation of the connection*

3.4. Fully welded beam to column connection with flange bracing and four column web bracing plates

The last connection model is a variety of the previous with additional bracing elements in the column web area. These bracing plates as well as the other elements are directly welded to the column flange and web. Again, their function is the increasing of the connection overall stiffness and stress distribution control. Figure 14 shows the solved connection model.

The solution shows that the numerical simulation confirms the theoretical claims for the bracing function in a connection; the plastic hinge is dislocated away from the beam end and causes overall decreasing of the stress in the connection. Not only that the maximum stress value decreases but also its location changes; it appears in one of the bracing plates to column flange welds. All of the welds forming the connection experience low stress values except of the upper beam flange to bracing rib welds that have no influence on the connection stiffness.

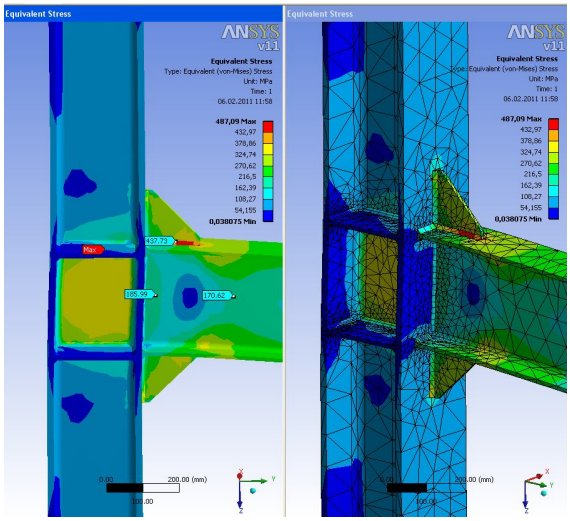

Fig.14 *Preview of a solved connection model*

The connection deformation under the load of the vertical force is given in figure 15. It does not exceed the 37,8 mm which is a relatively small deflection given the load magnitude. This gives the presented connection high rotational stiffness as rigid type of connections.

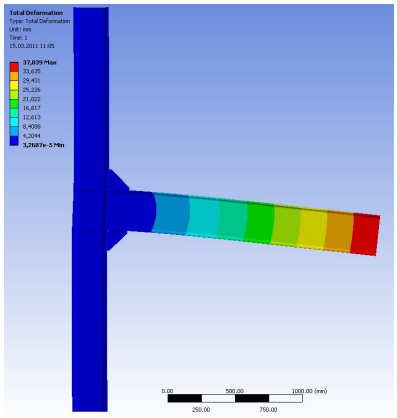

Fig.15 *Total deformation of the connection*

4. Results and discussion

The advantages that the numerical analysis and simulation brings are great. With this kind of research the connection characteristics can be analyzed and compared and at the same time it will be cost-free but effective. As already mentioned, it is of a big importance to make right choice for the connection used in a structure during the process of designing, mostly because of the connection function in the structure`s stability and safety. The comparison of the presented connections is made over their characteristics given in the moment-rotation diagram for each of the models. This moment-rotation diagrams are gained by the load and deformation values of the solved models in the analysis software. The relationship of the software results and the moment-rotation diagram variables is as follows:

$$M_s = F \cdot L_{beam} \quad [kNm]$$

- where the M_S is the moment caused by the applied beam load (F); the distance of the force action.

$$\varphi = arctg(T.D / 2) \quad [\text{deg}]$$

-it is a relation between the total deformation at the end of the beam (T.D) and the rotation of the connection (f)

At the end of the analysis the moment-rotation diagram of all four models are given in figure 16.

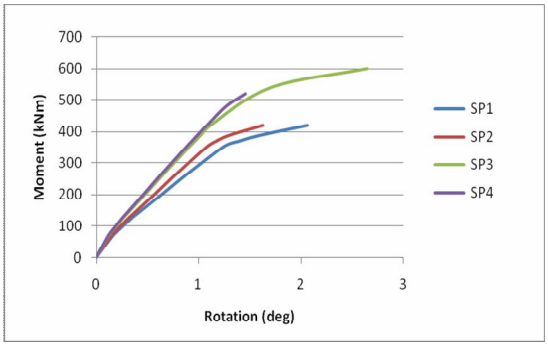

Fig.16 *Moment-rotation diagram for the presented models*

The difference in the characteristics that one type of a connection can give according to the member included in the design can be seen in the moment-rotation diagram of this four rigid connection models. The rotational capacity differs for each of the models as well as the rotational stiffness. The models with two bracing ribs included show great stiffness of the overall connection (SP3 and SP4). Although they have near values of the connection strength, the rotational capacity of the model without column web bracing plates (SP3) is greater than the one with included bracings (SP4). In the case of fully welded connection without bracing ribs (SP1 and SP3), the rotational stiffness is lower but they do have a certain rotational capacity. And regardless the fact of the difficulties that may occur during erection, this is usually a designer's choice for connection in cases where greater rotational stiffness and capacity is needed.

5. Conclusions

In the last few years the practice shows great affection to the numerical simulations and analysis of the constructions and construction parts. It is the fastest, low-cost as well as effective way of connection characteristics analysis. This analysis implies the assumption of internal distribution of forces that in the same time are in equilibrium with the applied external forces. Along with this, each element included in the connection is capable of transferring the assumed force and the deformation that occurs is within the deformation capacity of the elements. Thus, the connection characteristics are sum of its consisting elements characteristics. The rotational capacity and stiffness are one of the designer`s criteria during the process of constructing the structure. When a connection comes overloaded, it is the connections that have a great deformation capacity that contribute the overall safety of the structure. In certain instances this connections can become a design requirement for example plastic hinges may form in the connections thus it is necessary that the connections has sufficient rotation capacity to develop plastic mechanism. Rigid connections are needed when higher stiffness is required and in structures where additional bracing of the frame may be avoid by including this type of connection. The fully welded connections can give different characteristics that can change significantly if bracings or additional stiffeners added. The numerical analysis makes it easier for the designers to explore the connections characteristics and make new connection designs.

6. References

1. T.A Stolarski, Y.Nakasone, S.Yoshimoto, *Engineering Analysis with Ansys software*, Department of mechanical Engineering School of engineering and design, Brunel Univrsity, UK and Tokyo University of Science, Japan, 2006

2. European Steel Design Education Programme, *Influence of Connections on Behaviour of Frames*, Section 14: Structural systems: Building, 2010

3. European Steel Design Education Programme, *Moment Connections for Continuous Framing*, Section 11: Connection design: Static loading, 2010

4. Prof. Bogatinoski Z. PhD.,

5. W.McGuire, Professor Emeritus of Civil Engineering, *Introduction to Connection Design*, Cornell University, Ithaca, New York, USA

6. AnsysWorkbench 10.0 Tutorial, 2009

7. European Steel Design Education Programme, *Partial Strength Connections for Semi-Continuous Framing*, Section 11: Connection design: Static loading, 2010